## Parts list

| No. | Qa. | Part No. | Description | Dwg. No. |
|---|---|---|---|---|
| 1 | 3 | 9299144006 | Pipe nipple 4'' x 300mm | |
| 2 | 2 | 9290060156 | Socket female 4'' | - |
| 3 | 1 | 9290641040 | Adaptor, socket PVC 110x4'' | |
| 4 | 5 m | 9850414685 | PVC tube ø110 x 3,3mm | |
| 5 | 0,3 m | 6703471110 | Hose ø110mm | |
| 6 | 2 | 9146070250 | Hose clamp 104-138mm | |
| 7 | 2 | 9299150110 | T-piece 45°, ID 110 (PVC) | |
| 8 | 2 | 9299102110 | Bend 45°, with sockets 110mm | |
| 9 | 5 | 9299111110 | Bend 90°, with sockets 110mm | |
| 10 | 3 (2) | 9299080110 | Socket, ID 110mm | |
| 11 | 3 | 9290201514 | Reducer ø110 x ø75, PVC | |
| 12 | 1 m | 9850412227 | PVC tube ø75 x 2,2mm | |
| 13 | 1,5 m | 6703471075 | Hose ID ø75 | |
| 14 | 8 (6) | 9146075080 | Hose clip ø80 (left) | |
| 15 | 1 | 9129900006 | Glue (PVC) 0,5 L | |

3 (2) means 3 pcs supplied, 2 pcs. drawn

The items, shown in the part list,
provides the shown connection possibilities.

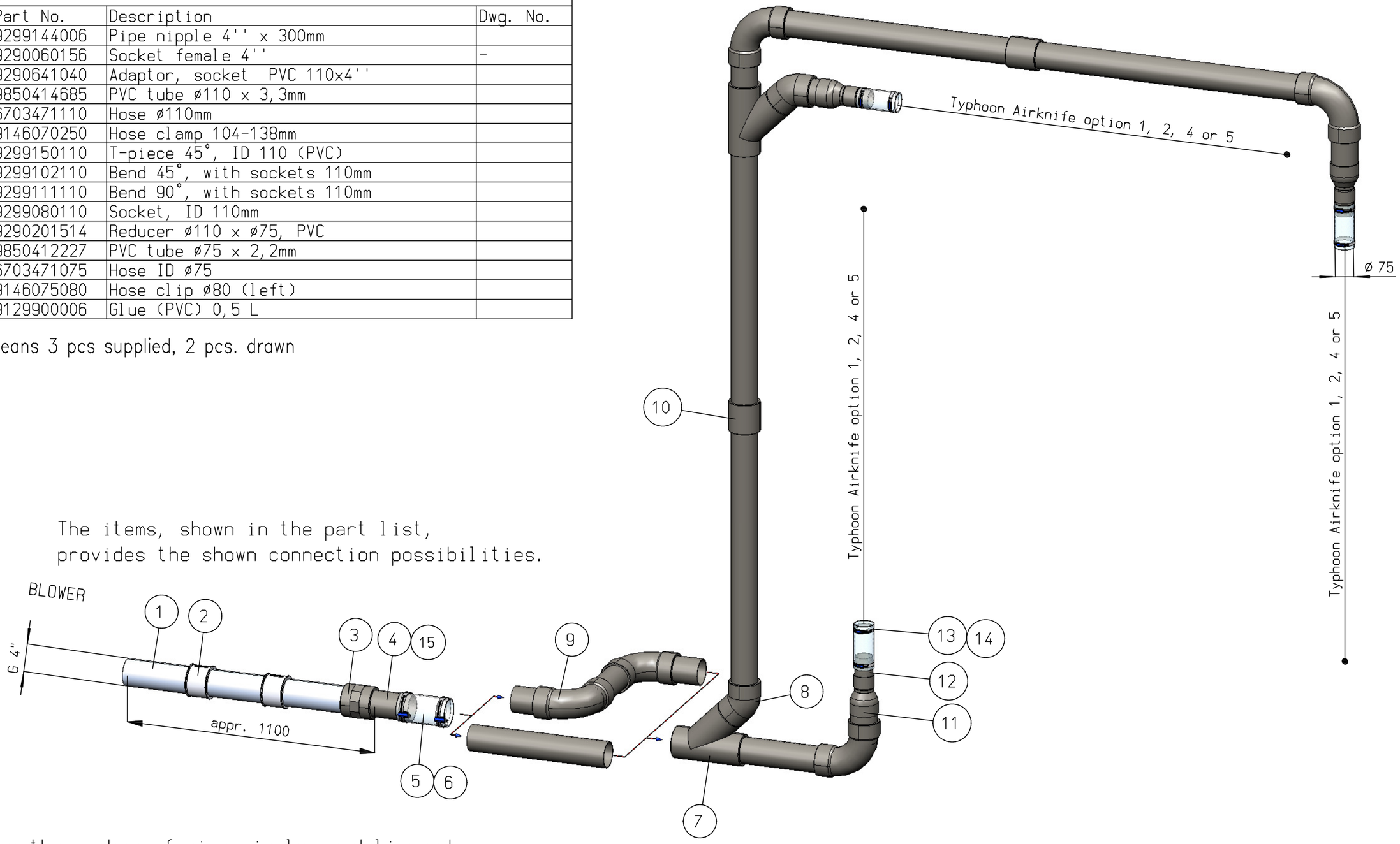


NOTE 1: Use the number of pipe nipple as delivered.
Air at blower side will heat up,
therefore first iron ducting required.

NOTE 2 Keep the ducting as short as possible.
Every bend, joint, connector of system accessory
contributes a certain loss of pressure
(friction of moving air).

| | | | | | | | | | | | | | |
|---|---|---|---|---|---|---|---|---|---|---|---|---|---|
| Roughness acc. to ISO 1302 | Dimensions tolerated acc. to ISO 129 | Tolerances of form and position acc. to ISO 1101 | Dimensions in mm. | - | - | - | | - |
| | | | | - | - | - | | - |

SIMCO ION™
An ITW Company
www.simco-ion.nl Tel: +31 (0)573 288333

XX
Control dim.

Copyright©
SIMCO (Nederland) BV

| Rev. | Description | Chk. | Date |
|---|---|---|---|

| Range [mm] | 0,5 - 3 | >3 - 6 | >6 - 30 | >30 - 120 | >120 - 315 | >315 - 1000 | >1000-2000 | >2000-4000 |
|---|---|---|---|---|---|---|---|---|
| middle | ±0,1 | ±0,1 | ±0,2 | ±0,3 | ±0,5 | ±0,8 | ±1,2 | ±2 |
| ~~rough~~ | ~~±0,15~~ | ~~±0,2~~ | ~~±0,5~~ | ~~±0,8~~ | ~~±1,2~~ | ~~±2~~ | ~~±3~~ | ~~±4~~ |

Name: **Ducting configuration 3-300-4" (appr. 8m)**
Drawn: BSG
Part no.: 1485371030

CAD GENERATED
NOT AUTOMATICALLY UPDATED
Date: 7-3-2013
M: 1:16
A3
Check:
Dwg. no.: 14853730